FEATURE:

1. 5x7 dots with cursor
2. Built in Controller (HD44780 OR Equivalent)
3. +5V Power Supply
   (Also available for +3V)
4. 1/16 Duty Cycle

INTERFACE PIN CONNECTIONS:

NO	SYMBOL	LEVEL	FUNCTION	NO	SYMBOL	LEVEL	FUNCTION
1	V_{SS}	——	VCC(+5V±5%)	8	DB1	H/L	DATA BIT1
2	V_{SS}	——	GND(0V)	9	DB2	H/L	DATA BIT2
3	V_0	——	CONTRAST ADJ	10	DB3	H/L	DATA BIT3
4	RS	H/L	REGISTER SELECT	11	DB4	H/L	DATA BIT4
5	R/W	H/L	READ/WRITE	12	DB5	H/L	DATA BIT5
6	E	H,H→L	ENABLE SIGNAL	13	DB6	H/L	DATA BIT6
7	DB0	H/L	DATA BIT0	14	DB7	H/L	DATA BIT7

DISPLAY CHARACTER ADDRESS CODE:

Display Position	1	2	3	4	5	6	7	8	9	10	11	12	13	14	15	16
DD RAM Address	00	01	02	03	04	05	06	07	08	09	0A	0B	0C	0D	0E	0F
DD RAM Address	40	41	42	43	44	45	46	47	48	49	4A	4B	4C	4D	4E	4F

ELECTRICAL CHARACTERISTICS:

ITEM	SYN.	CONDITION	MIN	TYPE	MAX.	UNIT
SUPPLY VOLTAGE FOR LCD	V_{DD}-V_0	T_a = 0℃	----	4.8	----	V
		T_a = 25℃	----	4.5	----	V
		T_a = 50℃	----	4.2	----	V
INPUT VOLTAGE	V_I	----	4.7	5.0	5.3	V
INPUT HIGH VOL.	V_{IH}	----	2.2	----	V_{DD}	V
INPUT LOW VOL.	V_{IL}	----	0	----	0.6	V
OUTPUT HIGH VOL.	V_{OH}	----	2.4	----	----	V
OUTPUT LOW VOL.	V_{OL}	----	----	----	0.4	V
SUPPLY CURRENT	I_{DD}	V_{DD}=5V	----	2.0	3.0	mA

ABSOLUTE MAXIMUM RATINGS:

ITEM	SYMBOL	MIN	TYPE	MAX.	UNIT
OPERATING TEMPERATURE	T_{OP}	0	---	+50	℃
STORAGE TEMPERATURE	T_{ST}	-20	---	+70	℃
INPUT VOLTAGE	V_I	V_{SS}	---	V_{DD}	V
SUPPLY VOLTAGE FOR LOGIC	V_{DD}-V_{SS}	-0.3	---	6.5	V
SUPPLY VOLTAGE FOR LCD	V_{DD}-V_0	0	---	6.5	V

THICKNESS:

Version	T_1	T_2	UNIT
EL & NO Backlight	4.7	9.5	mm
LED Backlight	7.8	13.0	mm

OUTLINE DIMENSION:

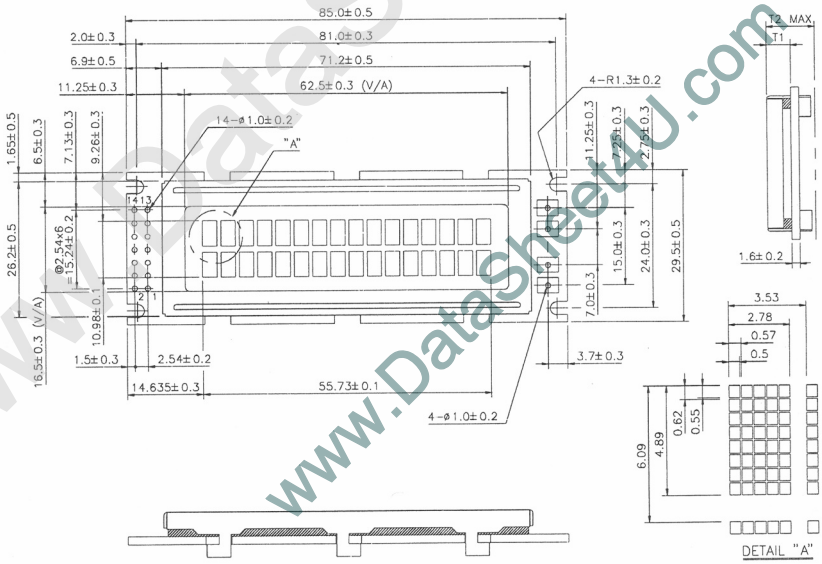

www.DataSheet4U.com